```
************************************************************
*      Infineon     Technologies AG
*      GUMMEL-POON  MODEL
*      VALID  UP    TO     6      GHZ
*      >>>    BGR405 <<<
*      (C)    2009   Infineon     Technologies AG
*      Version 1.0  February     2010
************************************************************
* - Please use the global SPICE parameter TEMP to set the junction
*   temperature of this device in your circuit to get correct DC
*   simulation results.
* - TEMP is calculated by TEMP=TA+P*(RthJS+RthSA). The junction
*   temperature TEMP is the sum of the ambient temperature TA and
*   the increment of temperature caused by the dissipated power
*   P=VCE*IC (IC collector current, VCE collector-emitter voltage).
* - RthJS is the thermal resistance between the junction and the
*   soldering point. RthJS for this device is 595 K/W. RthSA is the
*   thermal resistance of the PCB, from the soldering point to the
*   ambient. For determination of RthSA please refer to Infineon's
*   Application Note "Thermal Resistance Calculation" AN077.
* - The model has been verified in the junction temperature range
*   -25°C to +125°C.
* - TNOM=25 °C is the nominal ambient temperature.
*   Please do not change this value.
************************************************************
```

NOTE : Simulating with MWO. You will need to import the delivered schematic file (*BGR405_MWO.sch*) and the symbol file (*BGR405.syf*) for this device in order to recognize the pinning of the device. If you do not do so, then please connect the numbered pins of the default schematic symbol in MWO accordingly to the following pin assignment:

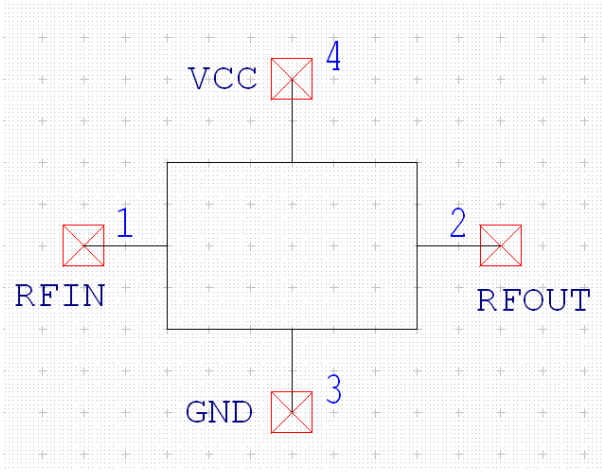

Import SPICE-Model in MWO (Microwave Office from AWR)

To import the SPICE-Model in MWO the following procedure is to be done:
Store the MWO-file. Right mouse click on Circuit Schematics, then select Import Schematic and go to the folder where the MWO-file ("*device_name.sch*") of the device has been stored and select the file. Then click OPEN.

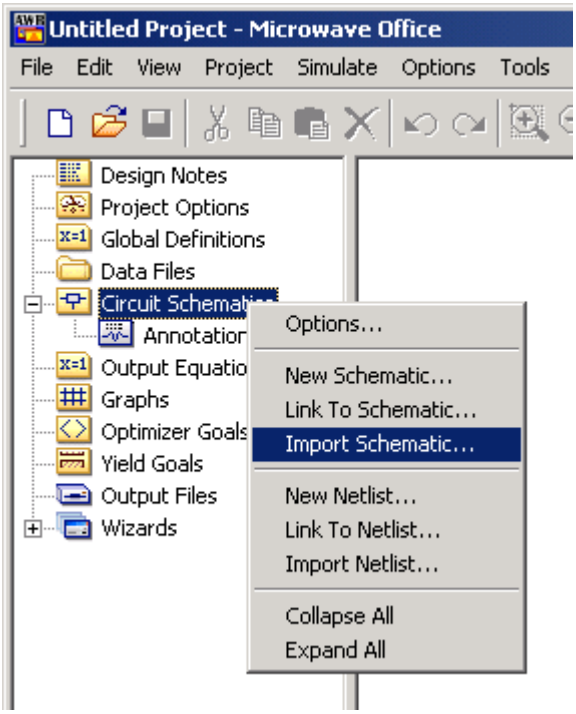

To import the special symbol for this device in MWO the following procedure is to be done: Go to Project/Circuit Symbols/Import Symbols... Then go to the folder where you have stored your file with the new symbol (*name.syf*) and click OK. Mause click on Import.

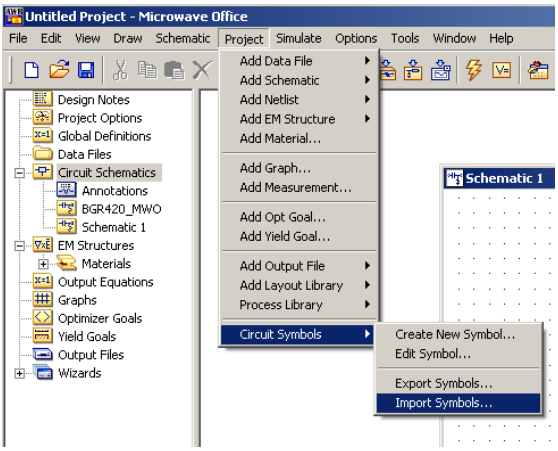

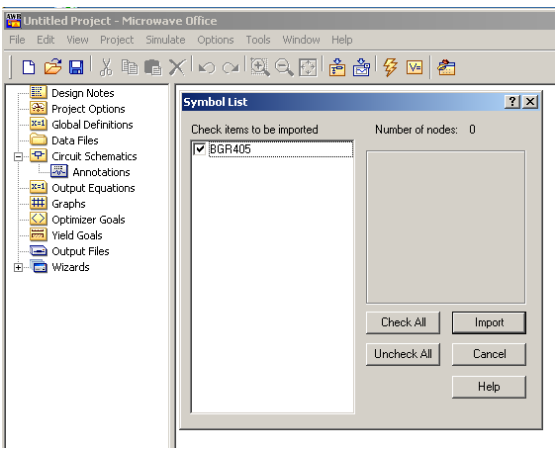

Import SPICE-Model in ADS (Advanced Design System from Agilent)

To import the SPICE-Model in ADS the following procedure is to be done:
Store the ADS-file. In a Schematic Window of ADS go to ->File -> Copy Design… Then set the path of the folder where the ADS-file ("*device_name.dsn*") of the device has been stored and select the file. Set also the path of your current project. Then click OK. After that just save the new design to be available in other Design windows.

